APPROVED BY _____ DATE _____ PAINT CODE = _____

REVISIONS			
REV.	DESCRIPTION	DATE	APRVD

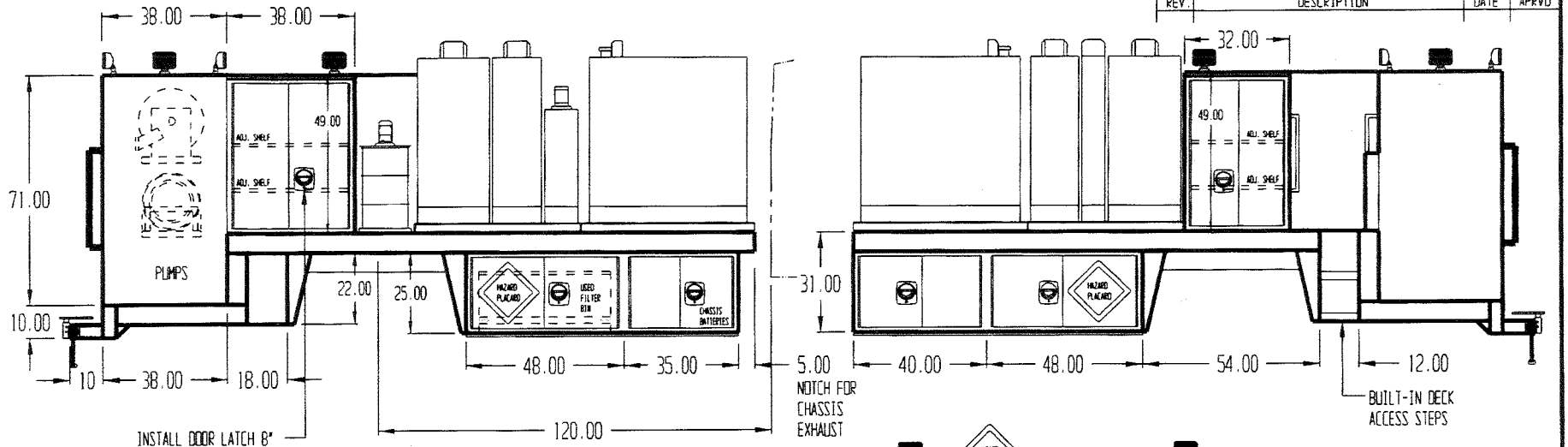

NOTE: USED FILTER BIN IS TO BE PLUMBED INTO THE EVAC SYSTEM

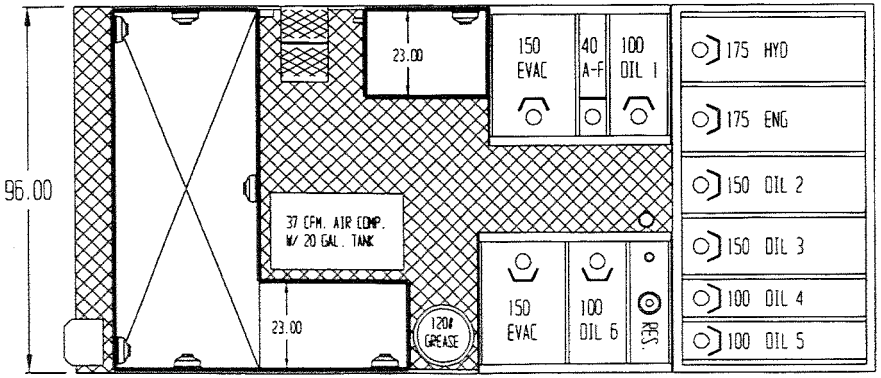

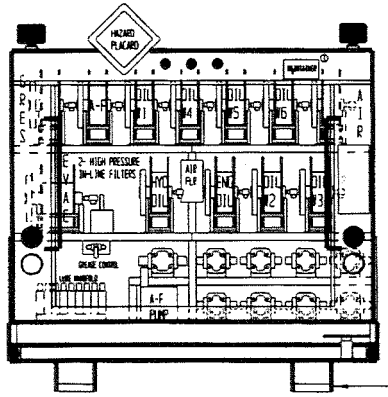

NOTE: LINE-X INSIDE REEL COMPARTMENT AND DECK PLATFORM

NOTE: BUMPER TO BE DECK PLATE

(2) CABLE STEPS

UOS DIMENSIONS ARE IN INCHES GENERAL TOLERANCES		MATERIAL:	Maintainer Corporation of Iowa, Inc. P.O. Box 349 1701 S. 2nd Avenue Sheldon, Iowa 51201
BREAK ALL EDGES .01 X 45°	ANGULAR ± 1° .XX ± .03 .XXX ± .005	SCALE: 1:30	SIZE: B
UOS RADII	UOS ANGLES	DRAWING NUMBER: V352-1	DFTM. / DATE:

PLEASE REPORT ANY ERRORS FOUND ON THIS PRINT

THIS PRINT CONTAINS CONFIDENTIAL INFORMATION AND IS THE SOLE PROPERTY OF MAINTAINER CORP. OF IOWA INC. AND IS NOT TO BE COPIED OR REPRODUCED WITHOUT THE EXPRESSED WRITTEN PERMISSION OF MAINTAINER CORP. OF IOWA INC.

PROPRIETARY DATA PROPERTY OF MAINTAINER CORPORATION OF IOWA, INC.

COPYRIGHT © 2001

MADE IN THE USA